SC250, Scrubtec 334
Parts list

07/2016
(1)
9100001615

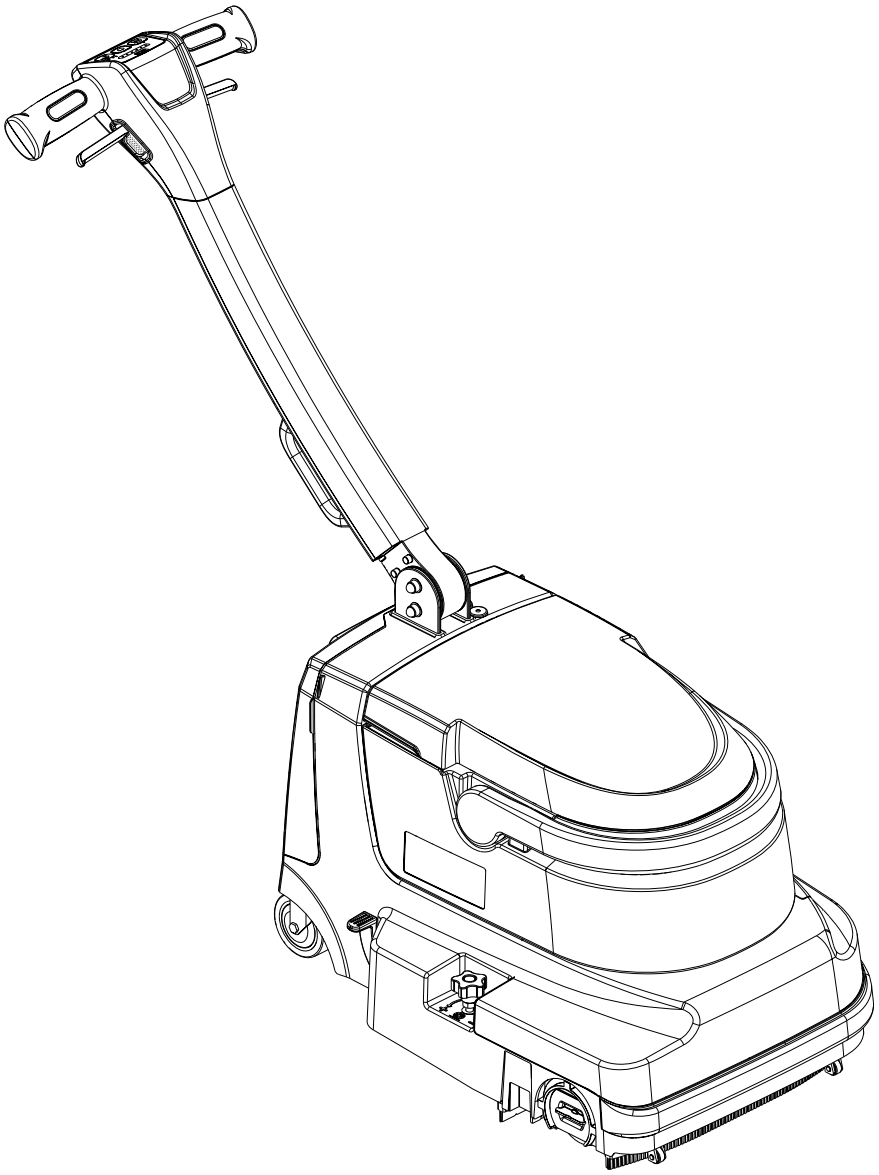

Model:
9087380020, 9087382020

Nilfisk

TABLE OF CONTENTS

GENERAL VIEW 2
SOLUTION AND RECOVERY TANK 4
BRUSH MOTOR 6
CHASSIS - FIXING AND COVER 8
CHASSIS - VACUUM AND REAR WHEELS 10
CHASSIS - SOLUTION AND VAC CHAMBER 12
CHASSIS - PEDAL WHEELS 14
HANDLE BAR 16
WIRING DIAGRAM 18
RECOMMENDED PARTS 20
ACCESSORIES/ OPTIONAL 21

WHEN ORDERING PARTS

– Use the part numbers from the “REF. NO.” columns in this parts list. If the “REF. NO.” column is blank; look under the “KIT” column to identify which kit contains the part in question, then use the kit callout, for example “K1”, to fi nd the “REF. NO.” for that kit.

– Specify the model and serial number of the machine.

– Use the space below to record the model and serial number for future reference.

Model Serial No.

* = Optional
\# = Modified item No. or New item No.
[ ] = Not shown

GENERAL VIEW

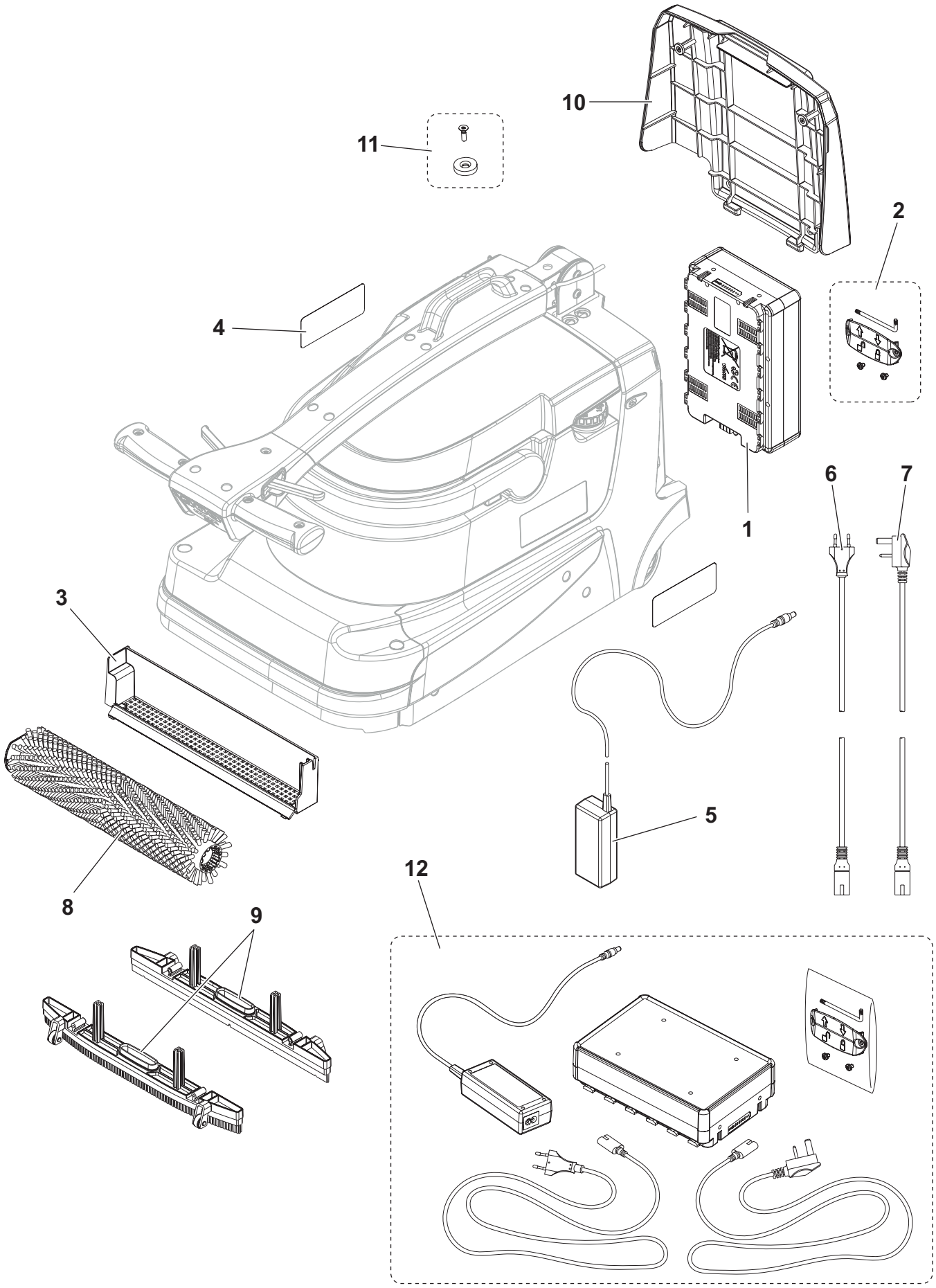

GENERAL VIEW

KIT	ITEM	REF. NO.	QTY	DESCRIPTION	DESCRIZIONE
	1*	**9100002070**	**1**	**BATTERY LI 36V 10S4P**	**KIT BATTERIA 36V LITIO 10S4P**
	2	9100002059	1	HANDLE BATTERY LI	KIT MANIGLIA BATTERIA
	3	9100001964	1	MINI CONTAINER PLAST. F DIRT PKD	CESTELLO PLAST. PORTARIFIUTI PKD
	4	9100002022	1	DECALS NILFISK SC250 KIT	KIT ADESIVI NILFISK SC250
	4	9100002023	1	DECALS NILFISK SCRUBTEC 334 KIT	KIT ADESIVI NILFISK SCRUBTEC 334
	5	9100002058	1	CHARGER BATTERY LI 100-240V 1.5A	CARICA BATTERIA LI 100-240V 1.5A PKD
	6	9100002007	1	CABLE POWER SUPPLY EU L.1000MM PKD	CAVO ALIMENTAZIONE EU L.1000MM PKD
	7*	**9100002055**	**1**	**CABLE EXTENSION LI UK PLUG**	**CAVO ALIMENTAZIONE UK L.1000MM PKD**
	8*	**9100002066**	**1**	**BRUSH CYL 340MM MEDIUM NYLON WHITE**	**SPAZZ. CIL. 340MM MEDIUM NYL. BIA. PKD**
	8*	**9100002067**	**1**	**BRUSH CYL 340MM HARD GRIT 320 GREY**	**SPAZZ. CIL. 340MM HARD GR 320 GRIGIO PKD**
	8*	**9100002068**	**1**	**BRUSH CYL 340MM MICROFIBRE**	**SPAZZ. CIL. 340MM MICROFIBRE PKD**
	8*	**9100002069**	**1**	**BRUSH CYL 340MM SOFT NYLON BLACK**	**SPAZZ. CIL. 340MM SOFT NYLON NERO PKD**
	9*	**9100002063**	**1**	**SQUEEGEE 360MM GREY RUBBER 2 PCS SET**	**TERGITORE PLAST. ASSEMBLATO SET 2 PZ**
	9*	**9100002064**	**1**	**SQUEEGEE 360MM PU 2 PCS SET**	**TERGITORE PLAST. SET 2 PZ**
	10	9100002026	1	COVER REAR GREY KIT	KIT COPERCHIO POST. GRIGIO
	10	9100002027	1	COVER REAR BLACK KIT	KIT COPERCHIO POST. NERO
	11	9100002028	1	MAGNET ROUND KIT	KIT MAGNETE CIRCOLARE
	12*	**9100002056**	**1**	**BATTERY LI PACK EU**	**KIT BATTERIA 36V LITIO 10S4P EU**

SOLUTION AND RECOVERY TANK

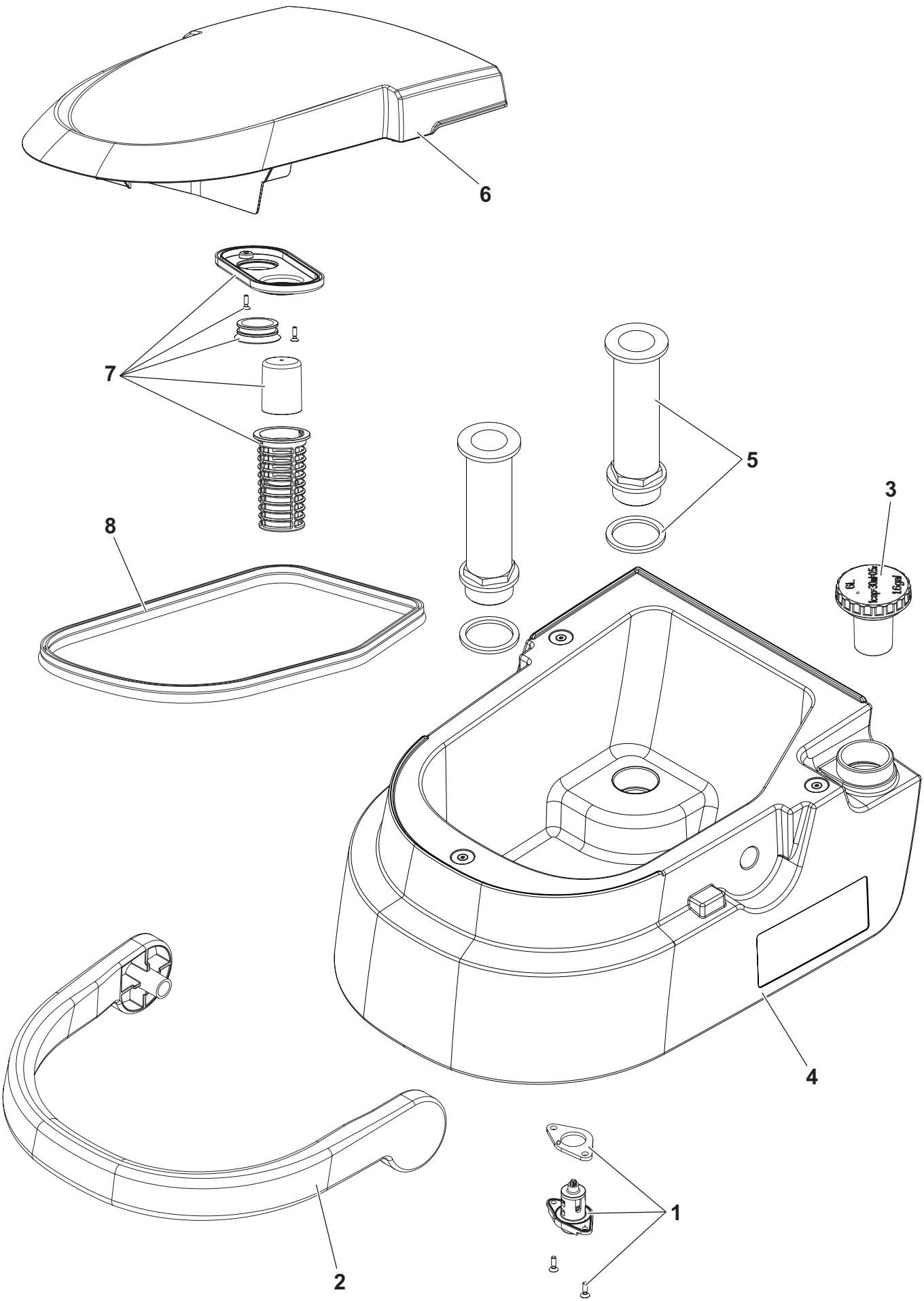

SOLUTION AND RECOVERY TANK

KIT	ITEM	REF. NO.	QTY	DESCRIPTION	DESCRIZIONE
	1	9100002029	1	VALVE F SOLUTION TANK KIT	KIT VALVOLA PER SERBAT. SOLUZIONE
	2	9100001972	1	HANDLE PLAST. GREY F TANK PKD	MANIGLIA PLAST. GRIGIA PER SERB. PKD
	2	9100002012	1	HANDLE PLAST. BLACK F TANK PKD	MANIGLIA PLAST. NERA PER SERBATOIO PKD
	3	9100001990	1	CAP PLAST. F TANK PKD	TAPPO PLAST. PER SERBATOIO PKD
	4	9100002030	1	TANK WATER PLAST. 6 LT GREY KIT	KIT SERBATOIO PLAST. GRIGIO 6 LT
	4	9100002031	1	TANK WATER PLAST. 6 LT BLUE KIT	KIT SERBATOIO PLAST. BLU 6 LT
	5	9100002032	2	PIPE PLAST. F TANK KIT	KIT TUBO PLAST. SERBATOIO
	6	9100002033	1	COVER TANK PLAST. GREY KIT	KIT COPERCHIO SERB. PLAST.GRIGIO
	6	9100002034	1	COVER TANK PLAST. BLUE KIT	KIT COPERCHIO SERB. PLAST.BLU
	7	9100002035	1	CAGE FLOAT PLAST. BLACK KIT	KIT PORTA GALLEGGIANTE PLAST. NERO
	8	9100001993	1	GASKET BULB REINFORCED -SKEIN PKD	GUARNIZ. ANIMA MET. A BULBO -MATASSA PKD

BRUSH MOTOR

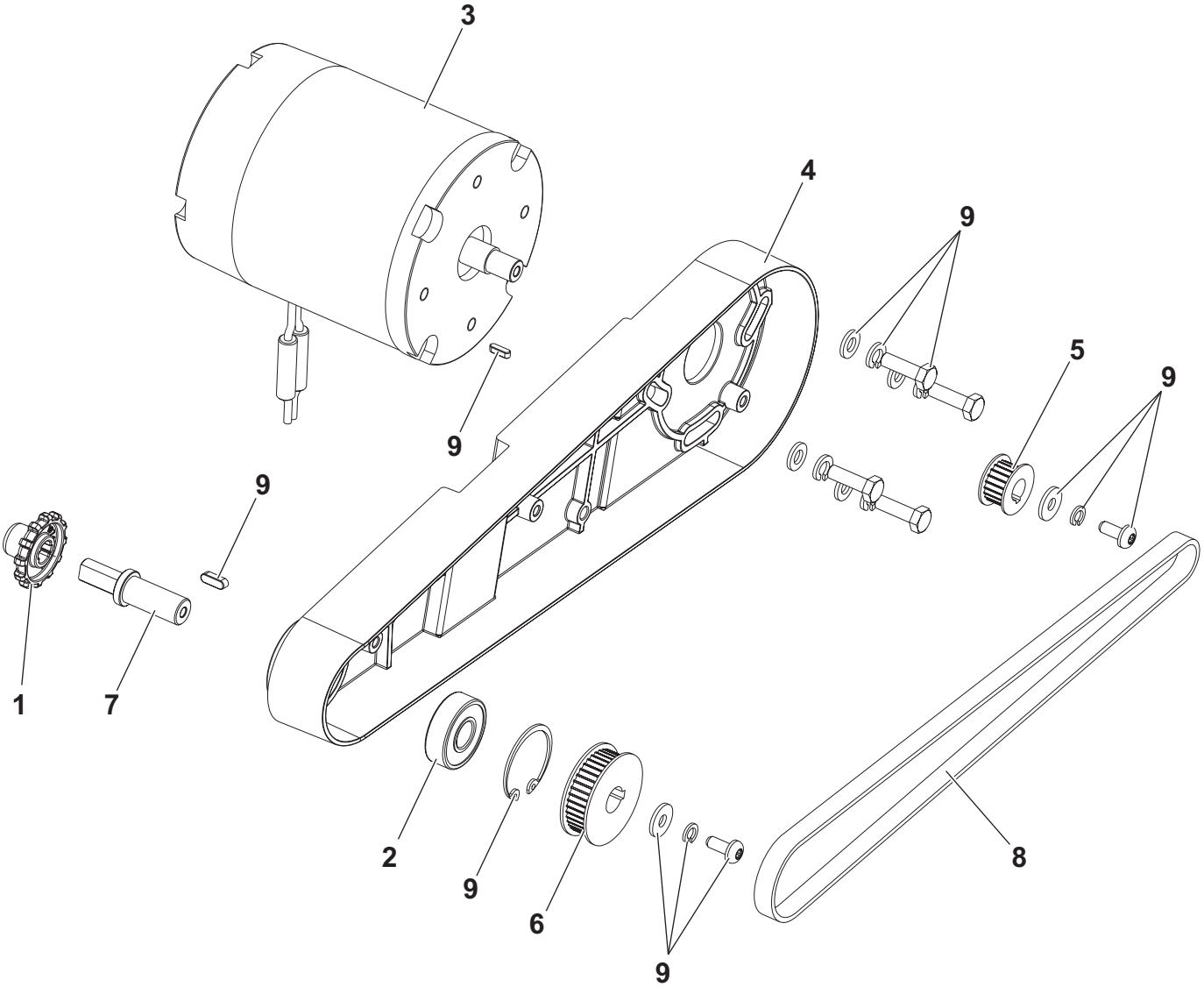

BRUSH MOTOR

KIT	ITEM	REF. NO.	QTY	DESCRIPTION	DESCRIZIONE
	1	9100001957	1	HUB TRACTION BRUSH PLAST. PKD	MOZZO TRASCINAM. SPAZZOLA PLAST.PKD
	2	9100002018	1	BEARING BALL 6201 2RS1PKD	CUSCINETTO A SFERE 6201 2RS1 PKD
	3	9100001966	1	MOTOR BRUSH 180W 36V PKD	MOTORE SPAZZOLA 180W 36V PKD
	4	9100001967	1	SUPPORT ALU F BRUSH MOTOR PKD	SUPPORTO ALLUM. MOTORE SPAZZOLA PKD
	5	9100001968	1	PULLEY TIMING BELT ALU HTD 20 3M 09 PKD	PULEGGIA DENTATA AL HTD 20 3M 09 PKD
	6	9100001969	1	PULLEY TIMING BELT ALU HTD 40 3M 09 PKD	PULEGGIA DENTATA AL HTD 40 3M 09 PKD
	7	9100001970	1	SHAFT GALV. F BRUSHPKD	ALBERO ZNT PER SPAZZOLA PKD
	8	9100001971	1	BELT TIMING HTD/OMEGA 669 3M 09 PKD	CINGHIA DENTATA HTD/OMEGA 669 3M 09 PKD
	9	9100002036	1	HARDWARE BRUSH MOTOR KIT	KIT VITERIA MOTORE SPAZZOLA

CHASSIS - FIXING AND COVER

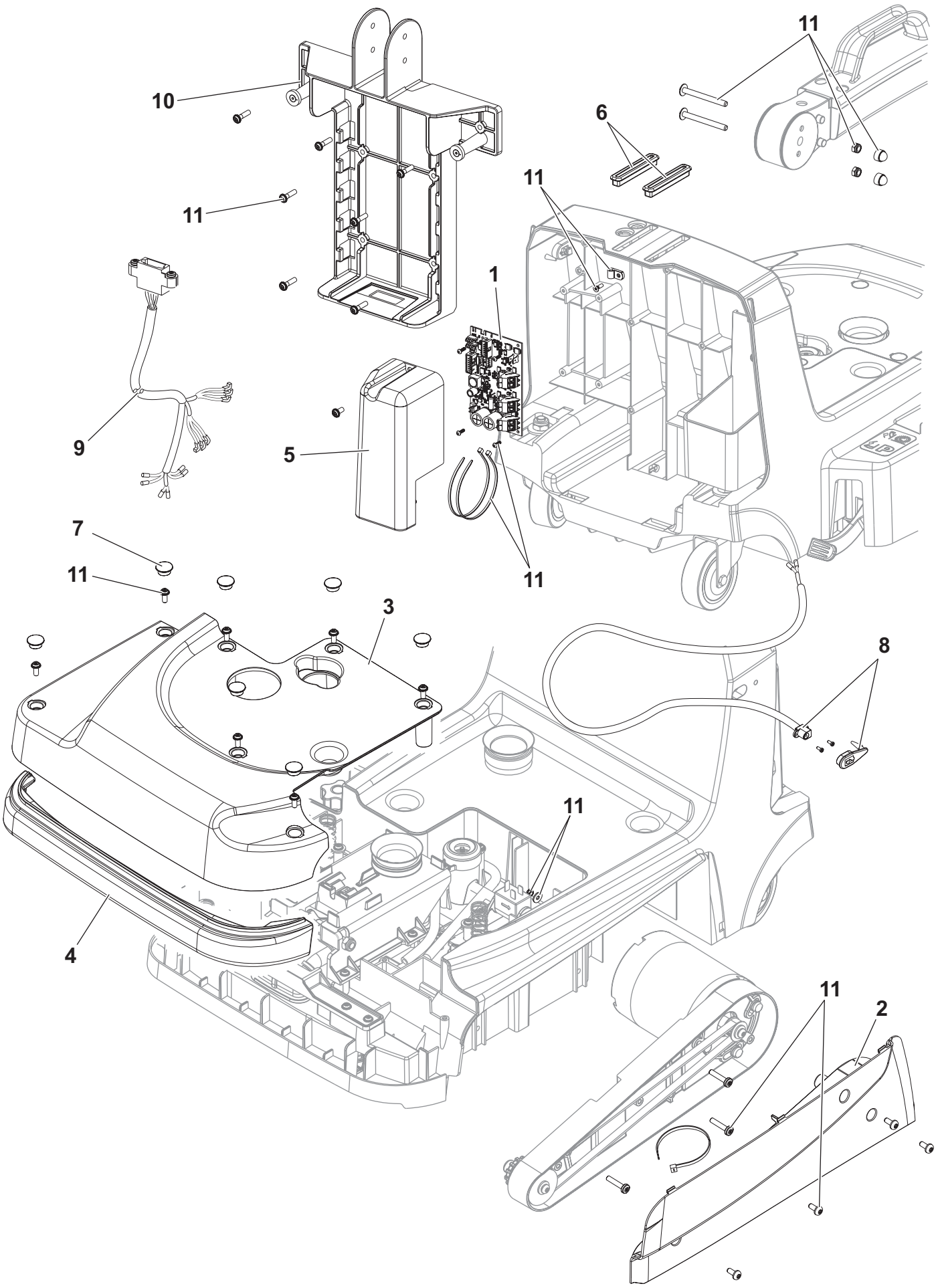

CHASSIS - FIXING AND COVER

KIT	ITEM	REF. NO.	QTY	DESCRIPTION	DESCRIZIONE
	1	9100001960	1	CONTROLLER MAIN MACH.P24 PROGR.PKD	SCHEDA FUNZIONI P24 PROGRAMMATA PKD
	2	9100001963	1	CASING BELT PROTECTION PLAST. GREY PKD	CARTER PROT. CINGHIA PLAST. GRIGIO PKD
	2	9100002011	1	CASING BELT PROTEC. PLAST. BLACK PKD	CARTER PROTEZ. CINGHIA PLAST. NERO PKD
	3	9100001965	1	CASING UPPER PLAST. GREY F CHASSIS PKD	CARTER SUP. PLAST. GRIGIO PER TELAIO PKD
	3	9100002010	1	CASING UPPER PLAST. BLACK F CHASSIS PKD	CARTER SUP. PLAST. NERO PER TELAIO PKD
	4	9100001988	1	BUMPER FRONT PLAST. PKD	PARAURTI ANTERIORE PLASTICA PKD
	5	9100001991	1	COVER PLAST.F CONTROLLER MACH.PKD	COPERCHIO PLAST. PER SCHEDA FUNZ. PKD
	6	9100001994	2	GASKET RUBBER HANDLE FIXING PKD	GUARNIZ. IN GOMMA AGGANCIO MANIGL. PKD
	7	9100002019	1	CAP PLAST. D.13.25XD.18 BLACK 10 PCS SET	TAPPO PLAST. D.13.25XD.18 NERO SET 10 PZ
	8	9100002037	1	HARNESS BATTERY CHARGER KIT	KIT CABLAGGIO CARICA BATTERIA
	9	9100002038	1	HARNESS BATTERY KIT	KIT CABLAGGIO BATTERIA
	10	9100002039	1	HANDLE FIXING KIT	KIT FISSAGGIO MANIGLIONE
	11	9100002040	1	HARDWARE CHASSIS KIT	KIT VITERIA TELAIO

CHASSIS - VACUUM AND REAR WHEELS

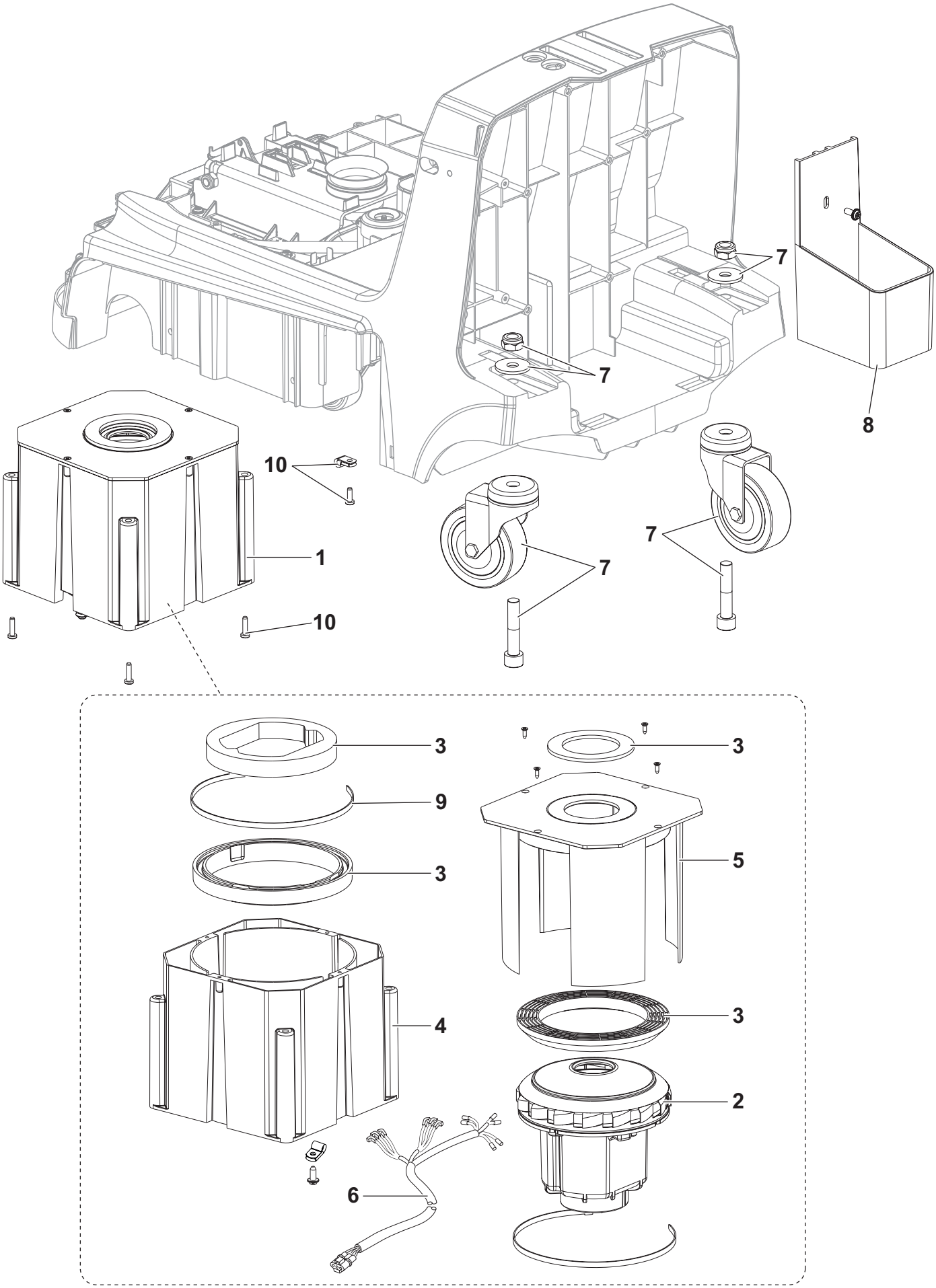

CHASSIS - VACUUM AND REAR WHEELS

KIT	ITEM	REF. NO.	QTY	DESCRIPTION	DESCRIZIONE
	1	9100002041	1	MOTOR VACUUM 36V 200W KIT	KIT MOTORE ASPIRAZIONE 36V 200W
	2	9100001987	1	MOTOR VACUUM 36V 200W PKD	MOTORE ASPIRATORE 36V 200W PKD
	3	9100002042	1	SEALINGS MOTOR VACUUM KIT	KIT GUARNIZIONI MOT. ASPIRAZIONE
	4	9100001983	1	SUPPORT EXT. PLAST. F VAC. MOTOR PKD	SUPPORTO EST. PLAST. PER MOT. ASP. PKD
	5	9100001989	1	SUPPORT INT. PLAST. F VAC. MOTOR PKD	SUPPORTO INT. PLAST. PER MOT. ASP. PKD
	6	9100001996	1	HARNESS VACUUM MOTOR PKD	CABLAGGIO MOTORE ASPIRATORE PKD
	7	9100002045	1	WHEELS CASTOR KIT	KIT RUOTE PIVOETTANTI D.75
	8	9100001992	1	CONTAINER PLAST. F BATTERY CHARGER PKD	CONTENITORE PLAST. PER CARICABATT. PKD
	9	1466337000	1	TIE CABLE 4.8X430 WHITE 2 PCS SET	FASCETTA NYLON 4.8X430 BIANCO SET 2 PZ
	10	9100002046	1	HARDWARE VACUUM AND REAR WHEELS KIT	KIT VITERIA SISTEMI ASP.- RUOTE POSTER.

CHASSIS - SOLUTION AND VAC CHAMBER

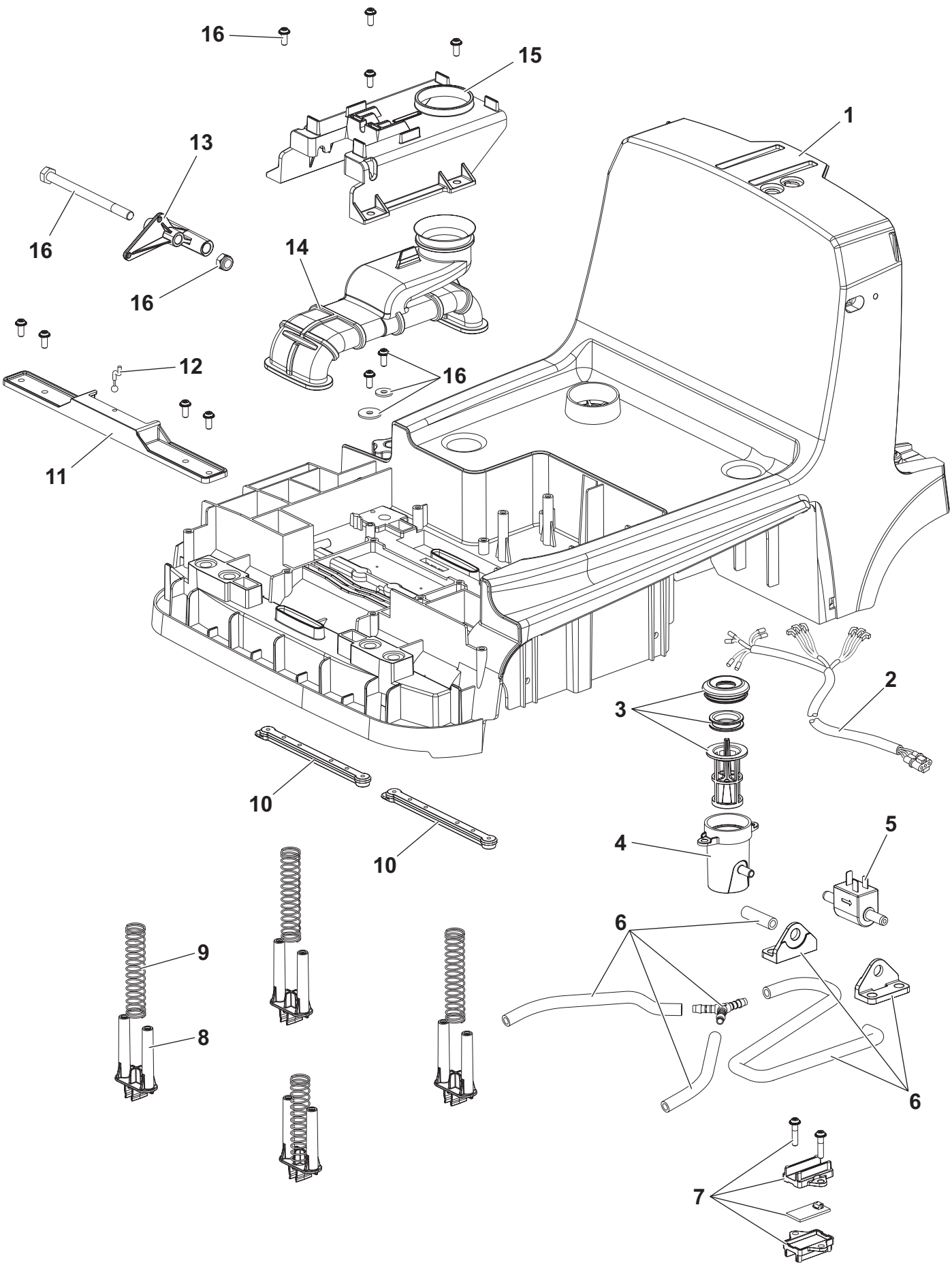

CHASSIS - SOLUTION AND VAC CHAMBER

KIT	ITEM	REF. NO.	QTY	DESCRIPTION	DESCRIZIONE
	1	9100001959	1	CHASSIS PLAST. GREY PKD	TELAIO MACCHINA PLAST. GRIGIO PKD
	1	9100002009	1	CHASSIS PLAST. BLACK PKD	TELAIO MACCHINA PLAST. NERO PKD
	2	9100001995	1	HARNESS WATER PUMP PKD	CABLAGGIO POMPA ACQUA PKD
	3	9100002047	1	FILTER PLAST. F WATER PUMP KIT	KIT FILTRO POMPA ACQUA
	4	9100001997	1	SUPPORT PLAST. F WATER FILTER PKD	SUPPORTO PLAST. PER FILTRO ACQUA PKD
	5	9100001981	1	PUMP WATER 24V 18W 21L/H PKD	POMPA ACQUA 24V 18W 21L/H PKD
	6	9100002048	1	HOSES KIT	KIT TUBI
	7	9100002049	1	SENSOR CAPACITIVE F WATER FLOW KIT	KIT SENSORE CAPACITIVO FLUSSO ACQUA
	8	9100001977	4	HOLDER SQUEEGEE PLAST. PKD	SUPPORTO RITEG/ TERGITORE PLASTICA PKD
	9	9100001984	4	SPRING COMPRESS. D.E.17.6 WIRE D.1.2 PKD	MOLLA COMPRESS. D.E.17.6 FILO D.1.2 PKD
	10	9100001975	2	DISPENSER WATER SPRAY SOFT PLAST. PKD	DOSATORE ACQUA PLAST. MORBIDA PKD
	11	9100001978	1	PLATE ALU SQUEEGEE LIFTER PKD	PIASTRA AL SOLLEVAM. TERGITORE PKD
	12	9100001980	1	HOOK METAL F FRONT SQUEEGEE LIFT. PKD	GANCIO MET. PER SOLL. TERGI. ANT. PKD
	13	9100001979	1	ROD LIFTING SQUEEGEE PLAST. PKD	BIELLA SOLLEVAM. TERGITORE PLASTICA PKD
	14	9100001974	1	CHAMBER VACUUMING RUBBER PKD	CAMERA D'ASPIRAZIONE GOMMA PKD
	15	9100001976	1	SUPPORT PLAST. F VAC. CHAMBER PKD	SUPP PLAST. PER CAMERA D'ASPIR. PKD
	16	9100002044	1	HARDWARE SOLUTION VAC CHAMBER KIT	KIT VITERIA VANO ASPIRAZIONE

CHASSIS - PEDAL WHEELS

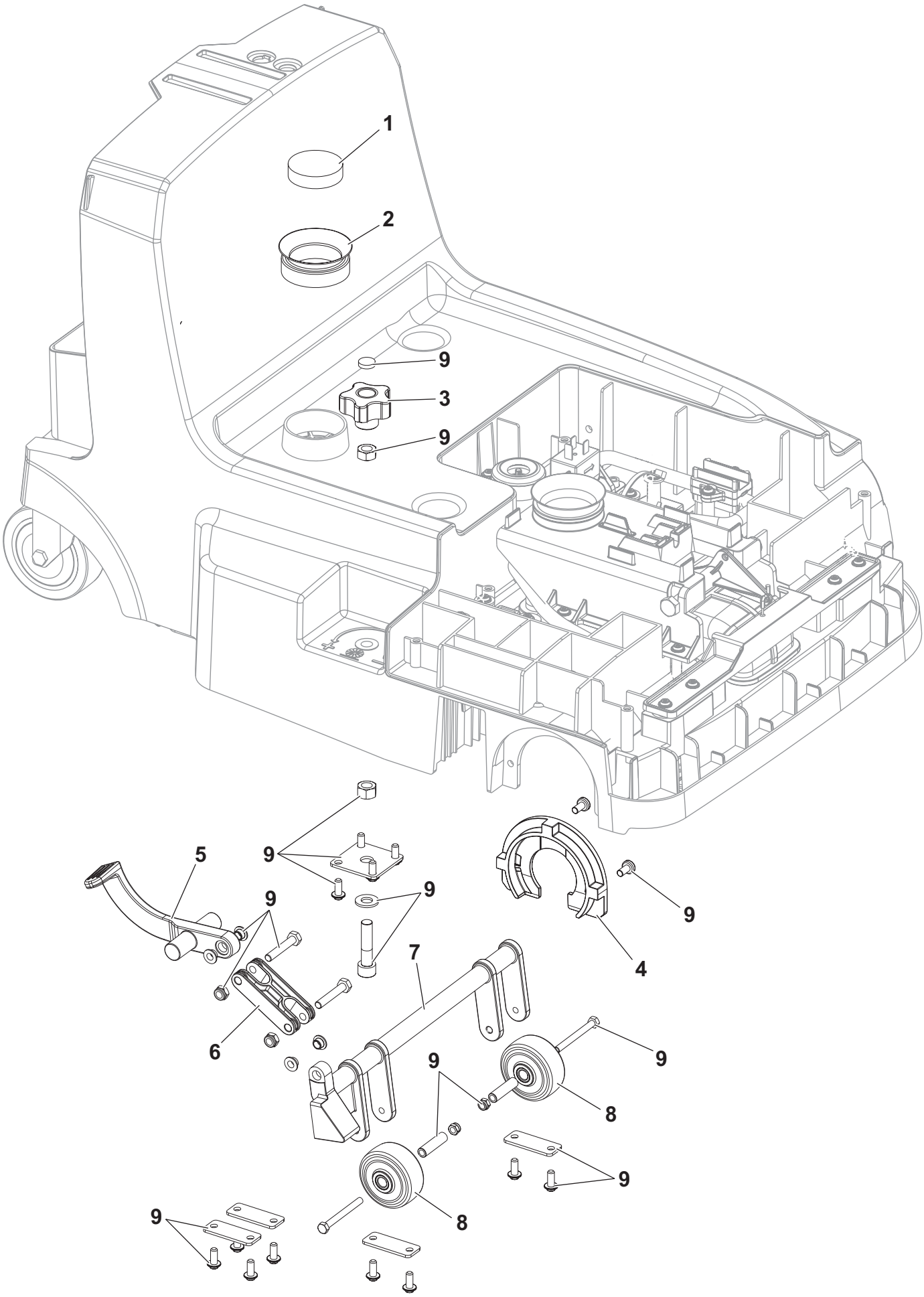

CHASSIS - PEDAL WHEELS

KIT	ITEM	REF. NO.	QTY	DESCRIPTION	DESCRIZIONE
	1	9100001278	1	FILTER VACUUM MOTOR PKD	FILTRO MOTORE ASPIRAZIONE PKD
	2	9100001958	1	GASKET PKD	GUARNIZIONE PKD
	3	9100002017	1	KNOB M8 PKD	VOLANTINO M8 CON FORO PASSANTE PKD
	4	9100001973	1	SUPPORT ALU F BRUSH HOOKING PKD	SUPPORTO AL PER AGGANCIO SPAZZ. PKD
	5	9100001982	1	LEVER PLAST. F PEDAL PKD	LEVA PLAST. PER PEDALE PKD
	6	9100001962	1	PEDAL ALU F MACHINE PARKING PKD	PEDALE ALL.PER PARCHEGGIO MACCH.PKD
	7	9100001961	1	SUPPORT ALU F FIXED WHEELS PKD	SUPPORTO ALLUM.PER RUOTE FISSE PKD
	8	9100000559	2	WHEEL D.51 GREY PKD	RUOTA D.51 GRIGIA PKD
	9	9100002043	1	HARDWARE PEDAL WHEELS KIT	KIT VITERIA PEDALE RUOTE

HANDLE BAR

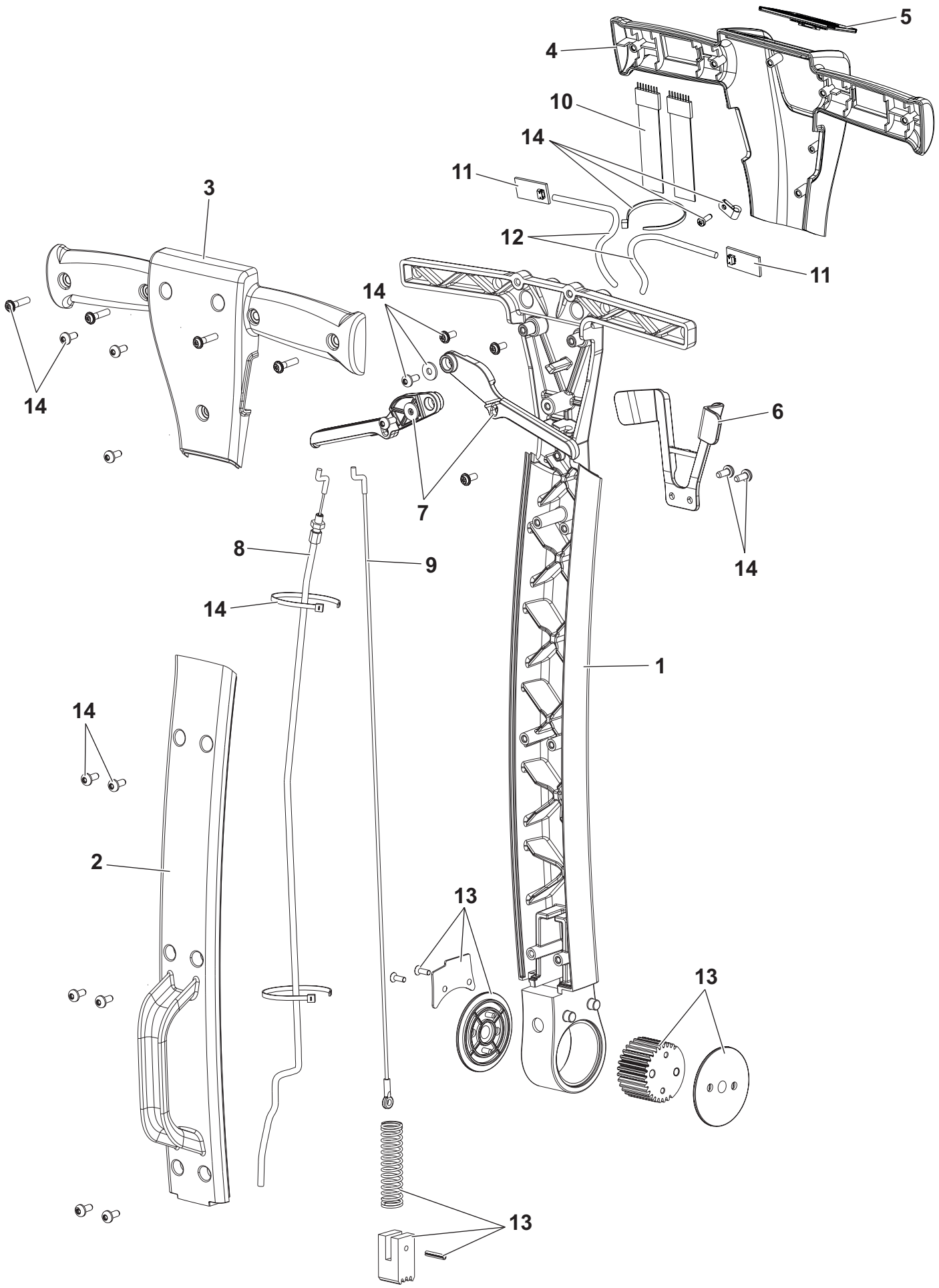

HANDLE BAR

KIT	ITEM	REF. NO.	QTY	DESCRIPTION	DESCRIZIONE
	1	9100001999	1	HANDLE BAR ALU PKD	MANIGLIONE COMANDO IN ALLUMINIO PKD
	2	9100002004	1	COVER PLAST. GREY F HANDLE PKD	COPERCHIO PLAST. GRIGIO PER MANIGL. PKD
	2	9100002015	1	COVER PLAST. BLUE F HANDLE PKD	COPERCHIO PLAST. BLU PER MANIGL. PKD
	3	9100002001	1	COVER LOWER PLAST. GREY F HANDLE PKD	COPERCHIO INF. PLAST. GRIGIO P. MAN. PKD
	3	9100002014	1	COVER LOWER PLAST. BLUE F HANDLE PKD	COPERCHIO INF. PLAST. BLU PER MAN. PKD
	4	9100002000	1	COVER UPPER PLAST. GREY F HANDLE PKD	COPERCHIO SUP. PLAST. GRIGIO P. MAN. PKD
	4	9100002013	1	COVER UPPER PLAST. BLUE F HANDLE PKD	COPERCHIO SUP. PLAST. BLU PER MAN. PKD
	5	9100001985	1	CONTROLLER USER INTERFACE PKD	SCHEDA INTERFACCIA UTENTE PKD
	6	9100002005	1	LOCK LEVER PLAST. PKD	BLOCCAGGIO LEVA PLASTICA PKD
	7	9100002003	2	LEVER ALU F HANDLE ADJUST. PKD	LEVA ALLUM. REGOLAZ. MANIGLIONE PKD
	8	9100002002	1	CABLE LIFTING SQUEEGEE PKD	CAVO SOLLEVAM. TERGITORE PKD
	9	9100001998	1	CABLE HADLE ADJUSTING PKD	CAVO REGOLAZ. MANIGLIONE PKD
	10	9100001986	1	HARNESS HANDLE BAR PKD	CABLAGGIO MANIGLIONE PKD
	11	9100002016	2	SENSOR CAPACITIVE PKD	SENSORE CAPACITIVO PKD
	12	9100002006	2	HARNESS HANDLE BAR SENSOR PKD	CABLAGGIO SENSORE MANIGLIONE PKD
	13	9100002020	1	LOCK HANDLE KIT	KIT FERMO MANIGLIONE
	14	9100002021	1	HARDWARE HANDLE BAR KIT	KIT VITERIA MANIGLIONE

WIRING DIAGRAM

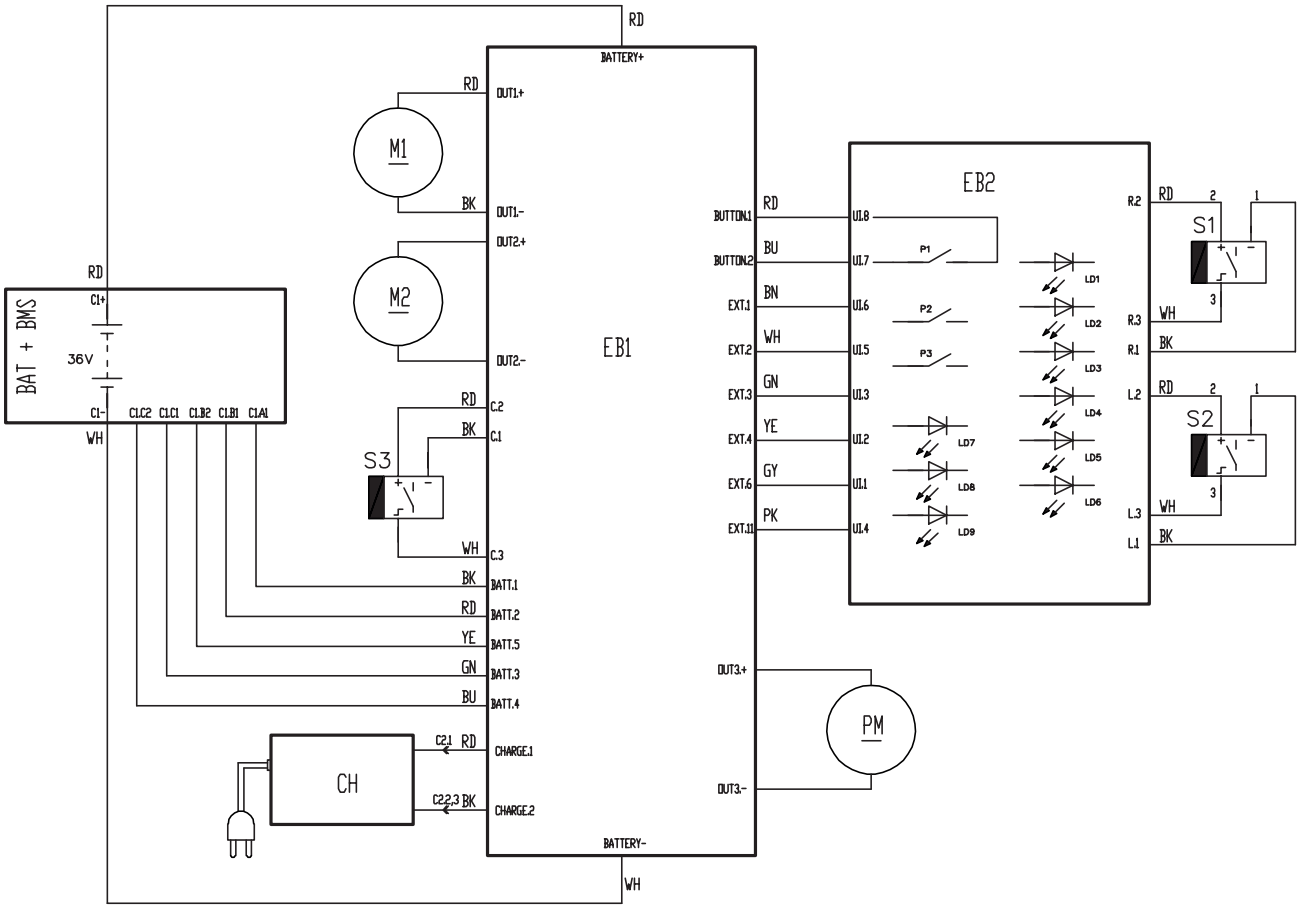

WIRING DIAGRAM

KEY	REF. NO.	QTY	DESCRIPTION	DESCRIZIONE
BAT BMS	9100002070	1	BATTERY LI 36V 10S4P	KIT BATTERIA 36V LITIO 10S4P
C1	9100002038	1	HARNESS BATTERY KIT	KIT CABLAGGIO BATTERIA
CH	9100002058	1	CHARGER BATTERY LI 100-240V 1.5A	CARICA BATTERIA LI 100-240V 1.5A PKD
EB1	9100001960	1	CONTROLLER MAIN MACH.P24 PROGR.PKD	SCHEDA FUNZIONI P24 PROGRAMMATA PKD
EB2	9100001985	1	CONTROLLER USER INTERFACE PKD	SCHEDA INTERFACCIA UTENTE PKD
M1	9100001966	1	MOTOR BRUSH 180W 36V PKD	MOTORE SPAZZOLA 180W 36V PKD
M2	9100001987	1	MOTOR VACUUM 36V 200W PKD	MOTORE ASPIRATORE 36V 200W PKD
PM	9100001981	1	PUMP WATER 24V 18W 21L/H PKD	POMPA ACQUA 24V 18W 21L/H PKD
S1	9100002016	1	SENSOR CAPACITIVE PKD	SENSORE CAPACITIVO PKD
S2	9100002016	1	SENSOR CAPACITIVE PKD	SENSORE CAPACITIVO PKD
S3	9100002049	1	SENSOR CAPACITIVE F WATER FLOW KIT	KIT SENSORE CAPACITIVO FLUSSO ACQUA

KEY	COLOUR	COLORE
BK	BLACK	NERO
BU	LIGHT BLUE	AZZURRO
BN	BROWN	MARRONE
GN	GREEN	VERDE
GY	GREY	GRIGIO
OG	ORANGE	ARANCIONE

KEY	COLOUR	COLORE
PK	PINK	ROSA
RD	RED	ROSSO
VT	VIOLET	VIOLA
WH	WHITE	BIANCO
YE	YELLOW	GIALLO

RECOMMENDED PARTS

REF. NO.	QTY	DESCRIPTION
		NORMAL WEAR
9100002066	1	BRUSH CYL 340MM MEDIUM NYLON WHITE
9100002063	1	SQUEEGEE 360MM GREY RUBBER 2 PCS SET
		ORDINARY MAINTENANCE
9100001993	1	GASKET BULB REINFORCED -SKEIN PKD
9100001971	1	BELT TIMING HTD/OMEGA 669 3M 09 PKD
9100001987	1	MOTOR VACUUM 36V 200W PKD
9100001975	2	DISPENSER WATER SPRAY SOFT PLAST. PKD
9100002045	1	WHEELS CASTOR KIT
9100001981	1	PUMP WATER 24V 18W 21L/H PKD
9100000559	2	WHEEL D.51 GREY PKD
9100002002	1	CABLE LIFTING SQUEEGEE PKD
		EXTRAORDINARY MAINTENANCE
9100002070	1	BATTERY LI 36V 10S4P
9100002058	1	CHARGER BATTERY LI 100-240V 1.5A
9100002029	1	VALVE F SOLUTION TANK KIT
9100001957	1	HUB TRACTION BRUSH PLAST. PKD
9100001966	1	MOTOR BRUSH 180W 36V PKD
9100001960	1	CONTROLLER MAIN MACH.P24 PROGR.PKD
9100001988	1	BUMPER FRONT PLAST. PKD
9100001974	1	CHAMBER VACUUMING RUBBER PKD
9100002048	1	HOSES KIT
9100002047	1	FILTER PLAST. F WATER PUMP KIT
9100001998	1	CABLE HADLE ADJUSTING PKD
9100001985	1	CONTROLLER USER INTERFACE PKD
9100002016	2	SENSOR CAPACITIVE PKD
9100002049	1	SENSOR CAPACITIVE F WATER FLOW KIT

ACCESSORIES/ OPTIONAL

REF. NO.	QTY	DESCRIPTION
9100002066	1	BRUSH CYL 340MM MEDIUM NYLON WHITE
9100002067	1	BRUSH CYL 340MM HARD GRIT 320 GREY
9100002068	1	BRUSH CYL 340MM MICROFIBRE
9100002069	1	BRUSH CYL 340MM SOFT NYLON BLACK
9100002063	1	SQUEEGEE 360MM GREY RUBBER 2 PCS SET
9100002064	1	SQUEEGEE 360MM PU 2 PCS SET
9100002055	1	CABLE EXTENSION LI UK PLUG
9100002056	1	BATTERY LI PACK EU
9100002058	1	CHARGER BATTERY LI 100-240V 1.5A
9100002070	1	BATTERY LI 36V 10S4P
9100002059	1	HANDLE BATTERY

Nilfisk S.p.A.
Registered office: Via F. Turati 16/18, 20121 Milano
Administrative office: Strada Comunale della Braglia n° 18 - 26862 Guardamiglio (Lodi)
Phone: +39 0377 451124 - Fax: +39 0377 51443
www.nilfisk.com